Standard

Shank For Machining Center

BT

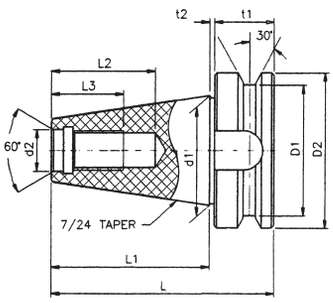

MAS BT SHANK

SPECIFICATION	D1	D2	t1	t2	L1	L2	L3	L	d1	d2	G
BT30	46	38	20	2	48.4	34	24	70.4	31.75	12.5	M12
BT40**	63	53	25	2	65.4	70	30	92.4	44.45	17	M16
BT50**	100	85	35	3	101.8	90	45	139.8	69.85	25	M24

SK

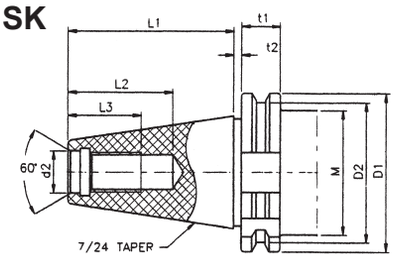

DIN 69871A SHANK

SPECIFICATION	D1	D2	t1	t2	L1	L2	L3	d1	d2	M	P	G
SK40	63.55	56.25	15.9	3.2	68.4	42.5	32	44.45	17	44.7	35	M16
SK50	97.5	91.25			101.75	61.5	47	69.85	25	70.1		M24

*DRAW BAR DIN 69872 A TYPE

ER COLLET

NT

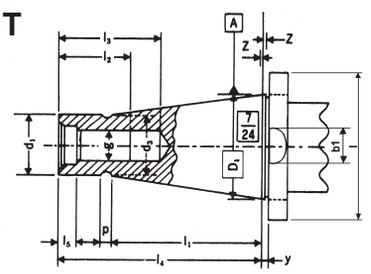

JIS B6101

TYPE	D1	Z	d1	d3	l	l1	p	y	g	l5	b1
NT30	31.750	0.4	17.4	16.5	68.4	48.4	3	1.6	M12, 1/2-12NC	6	16.1
NT40	44.450	0.4	25.3	24	93.4	65.4	5	1.6	M16, 5/8-11NC	8	16.1
NT50	69.850	0.4	39.6	38	126.8	101.8	8	3.2	M24,1”-8NC	11.5	25.7

Drill Chuck Taper

JT

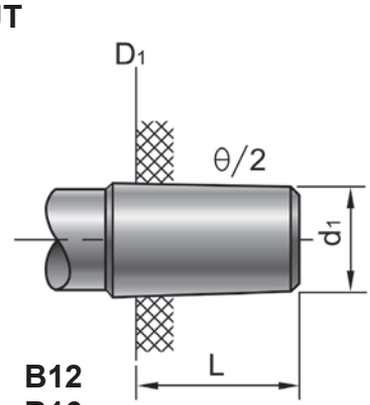

B12
B16
B18

JACOBS TAPER

TYPE	θ /2 TAPER	D1	d1	L
JT0		6.35	5.802	11.12
JT1		9.754	8.469	16.669
JT2	2° 19′52″	14.199	12.386	22.225
JT33	1° 49′01″	15.850	14.237	25.400
JT6	1° 29′88″	17.170	15.852	25.400
JT3	1° 31′26″	20.599	18.951	30.956
JT4	1° 29′59″	28.550	26.346	42.069
JT5	1° 29′05″	35.890	33.422	47.625

DIN 238

TYPE	θ /2 TAPER	D1	d1	L
B12	1° 25′43″	12.065	11.1	18.5
B16	1° 25′50″	15.733	14.5	24.0
B18	1° 25′50″	17.780	16.2	32.0

Morse Taper Shank MT

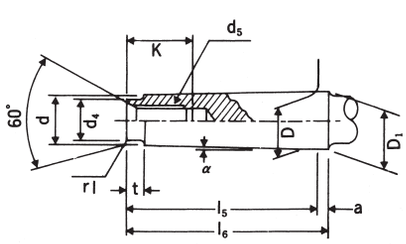

TYPE	D	a	D1	d	l5	l6	d4	d5
MT.0	9.045	3	9.2	6.4	50	53	6	-
MT.1	12.065	3.5	12.2	9.4	53.5	57	9	M6, 1/4-20NC
MT.2	17.780	5	18.0	14.6	64	69	14	M10, 3/8-16NC
MT.3	23.825	5	24.1	19.8	81	86	19	M12, 1/2-12NC
MT.4	31.267	6.5	31.6	25.9	102.5	109	25	M16, 5/8-11NC
MT.5	44.399	6.5	44.7	37.6	129.5	136	35.7	M20, 3/4-10NC
MT.6	63.348	8	63.8	53.9	182	190	51	M24, 1”-8NC